PROJECT REFERENCE NO.	SHEET NO.
HA-0004	Sig. 1.1

EDI MODEL 2010ECL CONFLICT MONITOR PROGRAMMING DETAIL

(remove jumpers and set switches as shown)

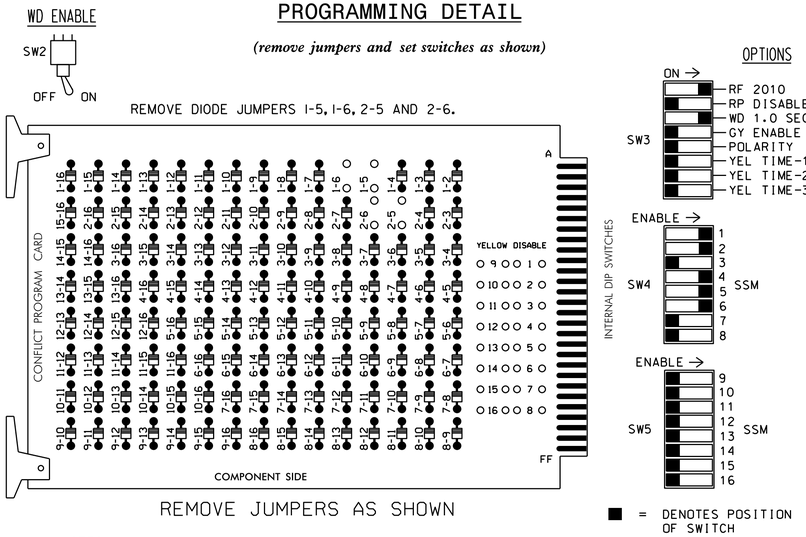

REMOVE JUMPERS AS SHOWN

■ = DENOTES POSITION OF SWITCH

NOTES:

1. Card is provided with all diode jumpers in place. Removal of any jumper allows its channels to run concurrently.
2. Make sure jumpers SEL2-SEL5 are present on the monitor board.

NOTES

1. To prevent "flash-conflict" problems, insert red flash program blocks for all unused vehicle load switches in the output file. The installer shall verify that signal heads flash in accordance with the Signal Plans.
2. To prevent red failures on unused monitor channels, see Red Monitor Board Programming Detail this sheet.
3. Enable Simultaneous Gap-Out for all Phases.
4. Program phases 2 and 6 for Startup In Green.
5. Program phases 2 and 6 for Yellow Flash.
6. If this signal will be monitored by an ATMS software, enable controller and detector logging for all detectors used at this location.

SIGNAL HEAD HOOK-UP CHART

LOAD SWITCH NO.	S1	S2	S2P	S3	S4	S4P	S5		S6	S6P	S7	S8	S8P
PHASE	1	2	2 PED	3	4	4 PED	5		6	6 PED	7	8	8 PED
SIGNAL HEAD NO.	11	21,22	NU	NU	41,42	NU	42	51	61,62	NU	NU	NU	NU
RED		128			101				134				
YELLOW		129			102				135				
GREEN		130			103				136				
RED ARROW	125							131					
YELLOW ARROW	126						132	132					
GREEN ARROW	127						133	133					

NU = Not Used

EQUIPMENT INFORMATION

CONTROLLER.....2070
CABINET.....332
SOFTWARE.....ECONOLITE OASIS
CABINET MOUNT.....BASE
OUTPUT FILE POSITIONS...12
LOAD SWITCHES USED.....S1,S2,S4,S5,S6
PHASES USED.....1,2,4,5,6
OVERLAPS.....NONE

EMERGENCY VEHICLE PREEMPTION PROGRAMMING DETAIL

(program controller as shown below)

From Main Menu press 'A' (Preemption), then '1' (Standard Preemptions). Press 'NEXT' to advance to Preemption #3.

```
   PREEMPTION  #3  SETTINGS (NEXT:1-10)
INTERVAL/TIMING ¦  CLEAR/DWELL PHASES
  GRN YEL  RED  ¦123456789101112131415 16
1 255  0.0  0.0 ¦   X
2   0  0.0  0.0 ¦
3   0  0.0  0.0 ¦
4   0  0.0  0.0 ¦
5   1  0.0  0.0 ¦ X   X
EXIT CALLS      ¦
          OPTIONS
PRIORITY (Y/N TO SELECT) ............MED
DELAY TIMER (0-255 SEC) .............*
MIN GREEN BEFORE PRE (0= DEFAULT)....1
PED CLEAR BEFORE PRE (0= DEFAULT)....0
YELLOW CLEAR BEFORE PRE (0= DEFAULT).0.0
RED CLEAR BEFORE PRE (0= DEFAULT)....0.0
DWELL MIN TIMER (0-255 SEC) .........*
DWELL MAX TIMER (0=OFF,1-255MIN) ....0
DWELL HOLD-OVER TIMER (0-255) .......0
LATCH CALL? .........................Y
LINK TO NEXT PREEMPT? ...............N
ENABLE BACKUP PROTECTION? ...........N
HOLD CLEAR 1 PHASES DURING DELAY? ...Y
FAST GREEN FLASH DWELL PHASES? ......N
PED CLEARANCE THROUGH YELLOW? .......N
INHIBIT OVERLAP GREEN EXTENSION? ....N
SERVICE DURING SOFTWARE FLASH? ......N
REST IN RED DURING DWELL INTERVAL? ..N
FLASH DWELL INTERVAL? ...............N
ALLOW PEDS IN DWELL INTERVAL? .......N
RE-TIME DWELL INTERVAL? .............Y
OVERLAPS:                ¦ ABCDEFGHIJKLMNOP
DWELL INT FLASH YELLOW   ¦
OMIT OVERLAPS:           ¦
```

* Denotes timing to be determined in field.

Program 2.0 sec Extend Time on Optical Detection Unit.

INPUT FILE POSITION LAYOUT

(front view)

		1	2	3	4	5	6	7	8	9	10	11	12	13	14
FILE "I"	U	SLOT EMPTY	SLOT EMPTY	SLOT EMPTY	SLOT EMPTY	SLOT EMPTY	SLOT EMPTY	SLOT EMPTY	SLOT EMPTY	SLOT EMPTY	SLOT EMPTY	SLOT EMPTY	SLOT EMPTY	SLOT EMPTY	FS DC ISOLATOR
	L														ST DC ISOLATOR
FILE "J"	U	SLOT EMPTY	SLOT EMPTY	SLOT EMPTY	SLOT EMPTY	SLOT EMPTY	SLOT EMPTY	SLOT EMPTY	SLOT EMPTY	SLOT EMPTY	SLOT EMPTY	SLOT EMPTY	PRE3 DC ISOLATOR	SLOT EMPTY	SLOT EMPTY
	L												NOT USED		

EX.: 1A, 2A, ETC. = LOOP NO.'S

FS = FLASH SENSE
ST = STOP TIME
PRE3 = EV PREEMPT

RED MONITOR BOARD PROGRAMMING

(position jumpers as shown below)

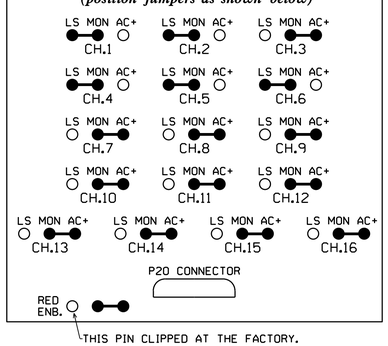

SPECIAL DETECTOR NOTE

Install a multizone microwave detection system for vehicle detection. Perform installation according to manufacturer's directions and NCDOT engineer approved mounting locations to accomplish the detection schemes shown on the Signal Design Plans.

THIS ELECTRICAL DETAIL IS FOR
THE SIGNAL DESIGN: 14-0955T
DESIGNED: November 2021
SEALED: 12/15/2021
REVISED: N/A

Electrical Detail - Sheet 1 of 2

DOCUMENT NOT CONSIDERED FINAL UNLESS ALL SIGNATURES COMPLETED

ELECTRICAL AND PROGRAMMING DETAILS FOR:

US 23-441 (Sylva Rd.)
at
Hyatt Road

Division 14 Macon County Franklin

Prepared in the Offices of:
Mobility and Safety Division
Signals Management Section
750 N.Greenfield Pkwy,Garner,NC 27529

PLAN DATE: December 2021	REVIEWED BY:
PREPARED BY: S. Armstrong	REVIEWED BY:

REVISIONS	INIT.	DATE

SEAL
NORTH CAROLINA PROFESSIONAL SEAL 036833 ENGINEER RYAN W. HOUGH

DocuSigned by: Ryan W. Hough Dec 15, 2021
DATE

SIG. INVENTORY NO. 14-0955T

15-DEC-2021 12:13
S:\ITSGUI\ITS Signals\Workgroups\Sig Mgmt\Projects From Signal Design\Active Projects\Armstrong\DIV Projects\14-0955 div project\140955_sm_ele_xxx.dgn
sarmstrong